SurMountor

Product specification

A1713

LED Shelf Light

Lister: Lxlan Assessor: Approver:

LED Aluminum Profile A1713

> Match Flexible LED Strips: Up to 12mm wide.

> Material: Anodized Aluminum Extrusion.

> Cover: Milky PC Cover.

> Length: 1 to 3 meter long.

> Mounting: Surface.

2835 Single color 120LED/METER

> Input voltage: 24VDC.

> Power: 11.5W/M.

> CCT: 3000K

> CRI >90

> Lumens: 900lm/M ~1000lm/M

> Waterproof: IP20

ISO 9001 SGS | CE | RoHS | 2 yrs warranty | CRI>90

ShenZhen Surmountor Lighting Co., LTD

TEL: +86-0755-27926119/27926326 E-mail: sales@surmountor.com ADD:4/F, No.2 Factory Building, Dayang, No.4 Tangwei Industrial Avenue, FuHai Street, Bao'an, Shenzhen, China

LED Shelf Light A1713			With 2835 LED STRIP				
Model	Power	Lumens/M	Ra	CCT(K)	Length	Voltage	LED Type
A1713	14W	720~800	>90	3000K	1.2M	DC24V	SMD2835

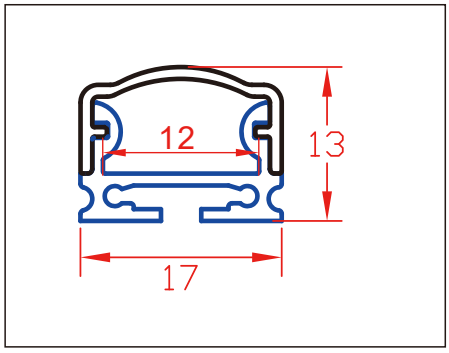

The LED Light A1713 is easy to install to wardrobe or shelf with mounting clip accessories. With modern design, it is suitable for cabinet / furniture / room / ceiling hanging lighting etc. Substantial aluminum mass provide good heat sink for high power leds.

How to install:

1, With clip

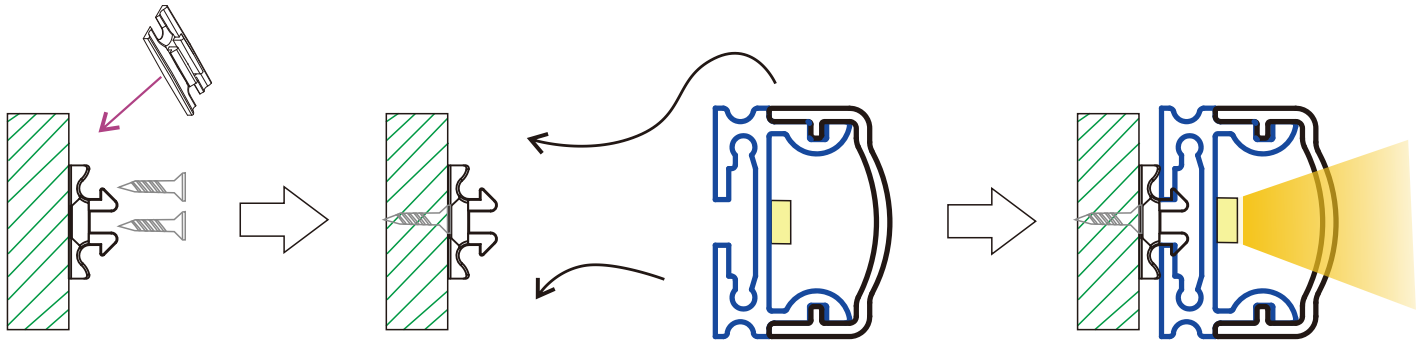

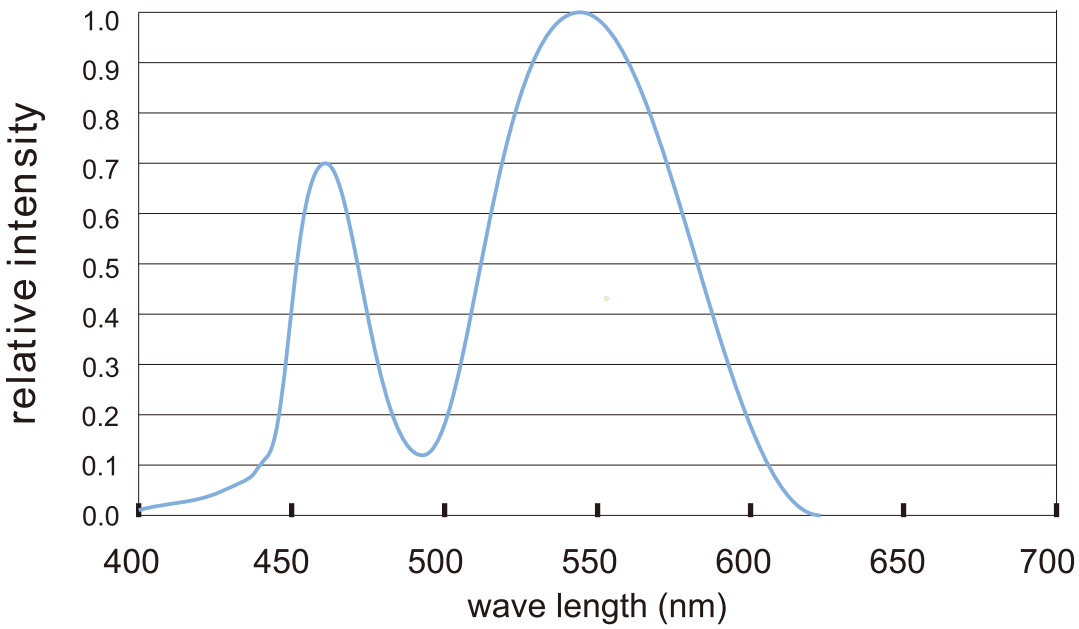

for: white LED

Radiation diagram

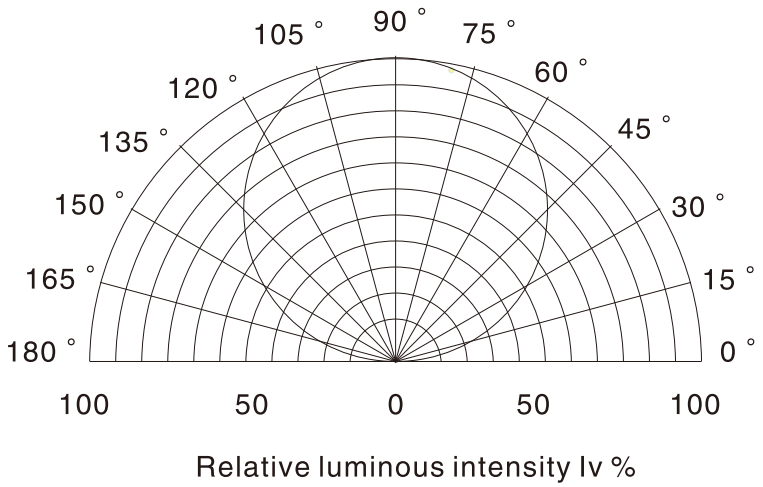

LED Light distribution