LED Linear SAPP Ceiling Light

ITEM No.: CLINE

Model Number	CLINE-2221-96
Size(mm)	W21*H22
Finished product length(mm)	L： 96*N+4(N=1.2.3.....)
Shear length (mm)	96mm 6LED/CUT
LM(3000K)	135LM/CUT
LM(4000K)	140LM/CUT
LM(6500K)	138LM/CUT
Power(W/CUT)	2W/CUT
Color	Black/White
Input Voltage	DC24V
CRI	80-95
Life Time	50000h
Beam Angle	40/24/15° optional
(UGR) Glare value (UGR)	＜19
Application	Office / Exhibition / Hall

ShenZhen Surmountor Lighting Co., LTD

TEL: +86-0755-27926119/27926326 E-mail: sales@surmountor.com ADD:4/F, No.2 Factory Building, Dayang, No.4 Tangwei Industrial Avenue, FuHai Street, Bao'an, Shenzhen, China

Installation steps

1. Spring leaf installation steps

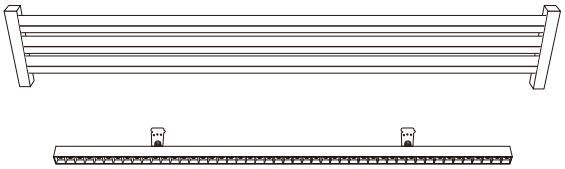

1. Choose the installation location.

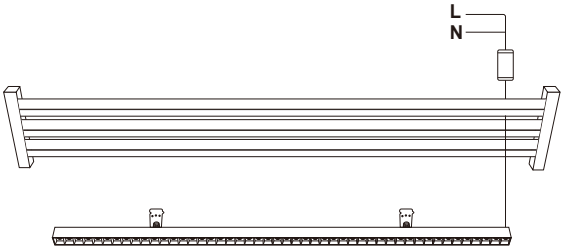

2. Connect the driver to the power.

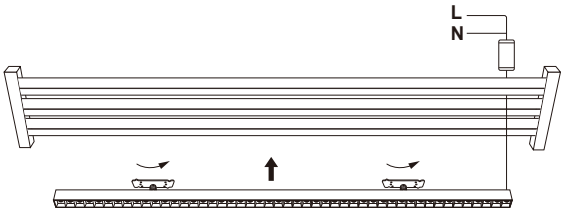

3. Rotate the spring mount plate and insert the light into SAPP ceiling.

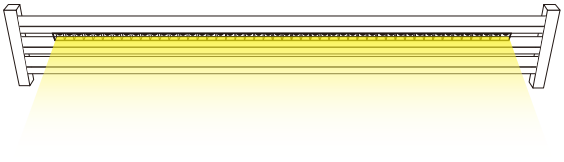

4. Embedded and fixed, the installation is complete.

2. Clip installation steps

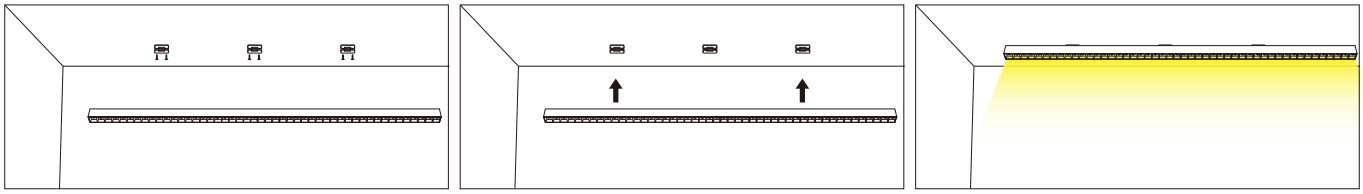

ShenZhen Surmountor Lighting Co., LTD

TEL: +86-0755-27926119/27926326 E-mail: sales@surmountor.com ADD:4/F, No.2 Factory Building, Dayang, No.4 Tangwei Industrial Avenue, FuHai Street, Bao'an, Shenzhen, China

3. Horizontal hoisting Installation Steps

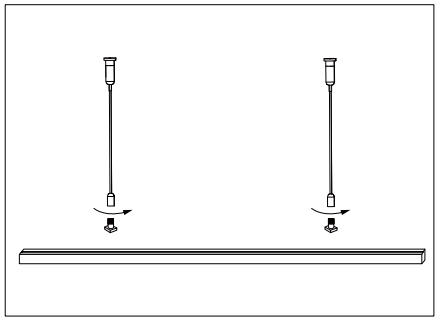

1. Spin to the limit

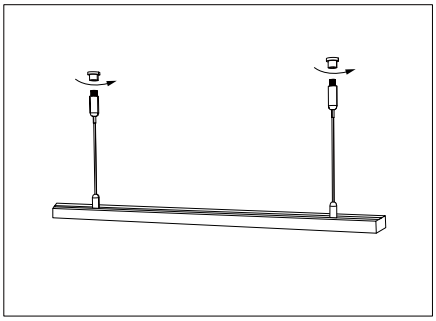

2. Take apart the head of wire locker

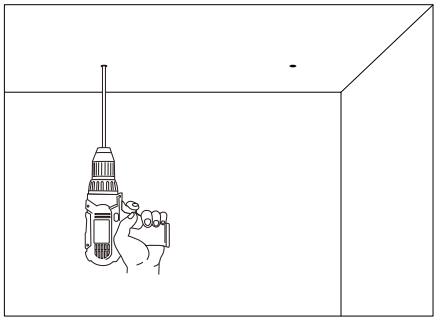

3. Drill in specific mounting placement

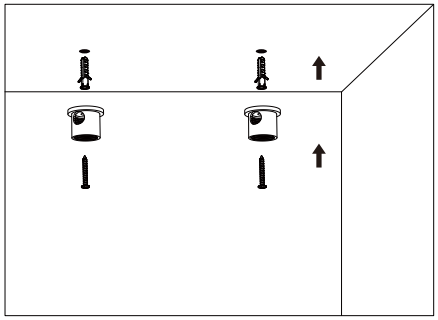

4. Fix the separate wire locker in ceiling

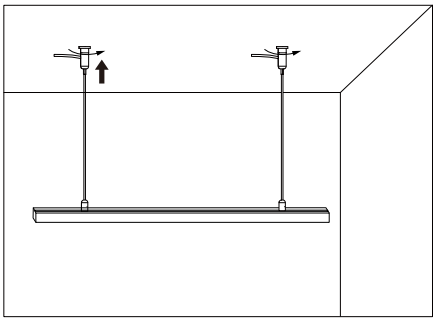

5. Spin upwards to the limit

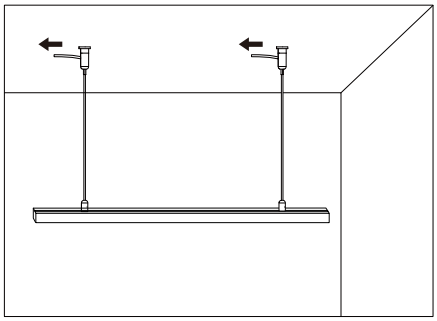

6. Pull the steel rope to adjust the height

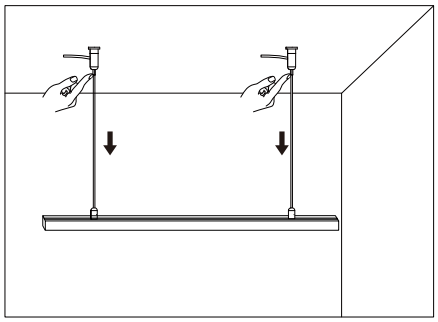

7. Press the elastic head and pull downwards to readjust the height

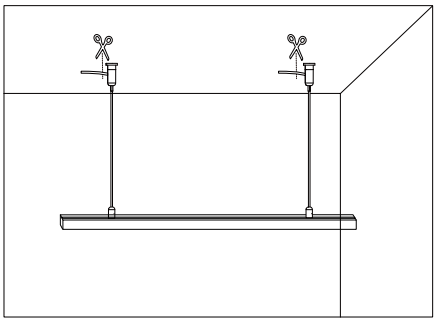

8. Cut off the exposed steel rope

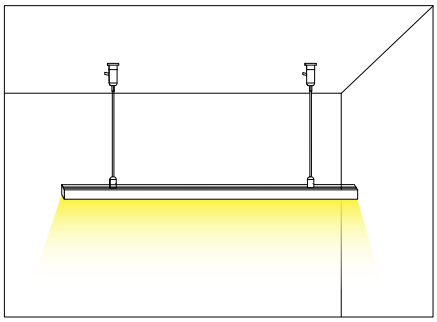

9. Picture of finished product after installation

Notice

1. The light should be installed by professionals, and use electricity safely to prevent electric shock.
2. If there is a fault, it needs to be repaired by professionals or contact the seller for after-sales processing.
3. Please do not modify or change the product or the warranty is not avaible.

ShenZhen Surmountor Lighting Co., LTD

TEL: +86-0755-27926119/27926326 E-mail: sales@surmountor.com ADD:4/F, No.2 Factory Building, Dayang, No.4 Tangwei Industrial Avenue, FuHai Street, Bao'an, Shenzhen, China